PD Series

DATA SHEET

Chemical Metering Pump

Designed to Last

Introducing the PD Series chemical metering pump, the new standard in water treatment. This upgrade to LMI's most popular pump series includes an improved drive design, all new electronics, and proven FASTPRIME™ liquid ends. Available in Manual or Enhanced control models, the PD Series pump fits seamlessly into your process control application. The Manual model offers straightforward control without the need for tedious calculations. Its split-scale dial ensures precision, even at lower flow rates. The Enhanced model offers external control and a large graphical display to provide intuitive access to advanced features such as calibration assist, system and user totalizers, the new STAYPRIME™ degassing technology, and more.

Trusted by water treatment professionals for more than a generation, the PD Series chemical metering pump will continue to earn your trust for years to come.

Manual Model

Enhanced Model

Performance Specifications

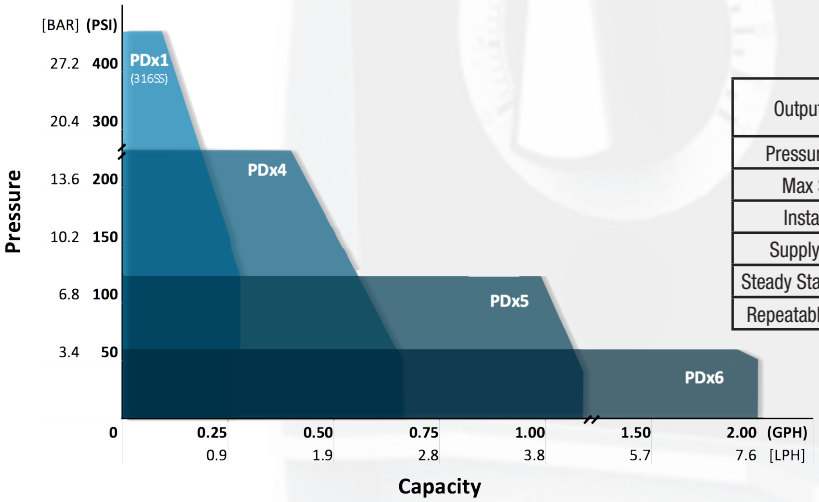

Output Range	.002 – 2.0 GPH (.008 – 7.6 LPH)
Pressure Range	50-450 PSI (3.4-30.6 BAR)
Max Stroke	160 SPM
Installation	Indoor/Outdoor
Supply Voltage	115-230V / 50-60Hz
Steady State Accuracy	+/- 3%
Repeatable Accuracy	+/- 3%

FastPrime™ Liquid Ends*

	PSI	GPH	BAR	LPH
PDx1	450	0.10	30.6	0.38
	300	0.20	20.4	0.76
	150	0.25	10.2	0.95
PDx4	250	0.35	17.0	1.32
	150	0.52	10.2	1.97
	50	0.68	3.4	2.57
PDx5	110	1.00	7.5	3.79
	30	1.10	2.0	4.20
PDx6	50	2.00	3.4	7.57

*Standard on PD0 and PD7 models

Features and Benefits

- Shared drive platform with universal 115-230V, 50/60 Hz power supply
- Flows from 2 GPH (7.57 LPH) up to 450 PSI (30.6 BAR)
- Simplified capacity control with constant stroke length to maintain calibration across the adjustable range
- Advanced electronics with dynamic compensation for temperature and voltage conditions
- FastPrime™ liquid ends (standard) that allow fast and easy priming with integrated bleed valve
- AutoPrime™ liquid ends (optional), designed specifically for off-gassing liquids (See page 4 for performance specifications)
- Rugged construction with NEMA 4X/IP 65 housing for the harshest environments and outdoor use
- Compact footprint for efficient use of space in process applications or OEM configuration
- Agency certifications - NSF 61 and 50 (pending), ETL, CE
- Built on decades of experience and fully backed by LMI's two-year warranty

Enhanced Functionality (PD7)

- **2.4" Color LCD** - Intuitive navigation allows you to configure and operate with ease – view status and alerts from a distance to confirm safe operation
- **External Control Inputs** - Automate your process with pulse pacing, 4-20 mA analog input*, remote start/stop, and tank level indication – ideal for proportional dosing
- **Calibration Assist** - Simply draw from a column and adjust the estimated value on-screen to the measured actual – calibration is that easy
- **System & User Totalizers** - An odometer for your pump that logs pump strokes, estimated volume, and power cycles – confirm pump operation between visits
- **StayPrime™ Degassing Technology** - Automates the priming cycle after a period of idle pump time to ensure prime

*4-20 mA Analog Input usage requires the MP-100 Pulse Pacer and the 57958 adapter cable.

Literature #IR-950015-02 rev 3, 11-2021 ©2018 Milton Roy, LLC

OUTPUT CODE 1 — 0.25 GPH (0.95 LPH); 450 psi (30.6 bar)

Drive End									
Control									
PD01		Manual Control	-						
PD71		Enhanced Control with Pulse Input, Remote Stop/Start, and Tank Level Input							
	Power Code								
	X	See Power Code Table							
		Liquid End	**Head**	**Fittings**	**Balls**	**Seat / O-Rings**	**Connections**	**RPM Kit**	
		Machined FastPrime™							
		907NP	316SS	316SS	316SS	316SS / PTFE	1/4” NPT	RPM-907	
PD01	1	-907	N	P					

OUTPUT CODE 4 — 0.68 GPH (2.6 LPH); 250 psi (17.0 bar)

Drive End									
Control									
PD04		Manual Control	-						
PD74		Enhanced Control with Pulse Input, Remote Stop/Start, and Tank Level Input							
	Power Code								
	X	See Power Code Table							
		Liquid End	**Head**	**Fittings**	**Balls**	**Seat / O-Rings**	**RPM Kit**		
		Molded FastPrime™							
		822	PVDF	PVDF	Ceramic	PTFE / Polyprel®	RPM-822		
		823	PVDF	PVDF	Ceramic	PTFE / Polyprel®	RPM-823		
		828	PVC	PVC	Ceramic	PTFE /Polyprel®	RPM-822		
		Machined FastPrime™							
		925	PP	PP	Ceramic	PTFE / Polyprel®	RPM-823		
		927	316SS	316SS	316SS	316SS / PTFE	RPM-927		
		928	PVC	PVC	Ceramic	PTFE / Polyprel®	RPM-822		
		929	Acrylic	PVDF	PTFE	Polyprel®	RPM-929		
		920	Acrylic	PVC	Ceramic	PTFE / Polyprel®	RPM-822		
		AutoPrime™							
		A28	PVC	PVC	Ceramic	PTFE / Polyprel®	RPM-A20A		
		A20	Acrylic	PVC	Ceramic	PTFE / Polyprel®	RPM-A20A		
		High Viscosity							
		624VI	PP	PP	316SS	PTFE	RPM-624		
		626VI	Acrylic	PP	316SS	PTFE	RPM-626		
			FastPrime Valve Code		**AutoPrime Valve Code**				
			S	with 4 Function Valve	H	with 4 Function Valve			
			N	-	A	-			
				Connection Code		**Also sold as**			
				I	Imperial	2			
				M	Metric	3			
				P	Pipe (1/4” NPT, 316SS only)	0			
PD04	1	- 822	S	I					

POWER CODE TABLE

Power Code	Voltage	Frequency	Plug
1	115/230V	50-60 Hz	110-120V US Plug, UL
2	115/230V	50-60 Hz	220-240V US Plug, UL
3	115/230V	50-60 Hz	220-240V DIN Plug, CE
5	115/230V	50-60 Hz	220-240V UK Plug, CE
6	115/230V	50-60 Hz	220-240V Aust/NZ Plug

 ©2018 Milton Roy, LLC

OUTPUT CODE 5 — 1.1 GPH (4.2 LPH); 110 psi (7.62 bar)

Drive End

Control		
PD05	Manual Control	-
PD75	Enhanced Control with Pulse Input, Remote Stop/Start, and Tank Level Input	

Power Code

X See Power Code Table

Liquid End	Head	Fittings	Balls	Seat / O-Rings	RPM Kit
Molded FastPrime™					
832	PVDF	PVDF	Ceramic	Polyprel®	RPM-832
833	PVDF	PVDF	Ceramic	PTFE	RPM-833
838	PVC	PVC	Ceramic	Polyprel®	RPM-832
Machined FastPrime™					
935	PP	PP	Ceramic	PTFE	RPM-833
937	316SS	316SS	316SS	316SS / PTFE	RPM-937
938	PVC	PVC	Ceramic	Polyprel®	RPM-832
939	Acrylic	PVDF	PTFE	Polyprel®	RPM-939
930	Acrylic	PVC	Ceramic	Polyprel®	RPM-832
AutoPrime™					
A38	PVC	PVC	Ceramic	PTFE / Polyprel®	RPM-A30A
A30	Acrylic	PVC	Ceramic	PTFE / Polyprel®	RPM-A30A
High Viscosity					
634VI	PP	PP	316SS	PTFE	RPM-634
636VI	Acrylic	PP	316SS	PTFE	RPM-636

FastPrime Valve Code		AutoPrime Valve Code	
S	with 4 Function Valve	H	with 4 Function Valve
N	-	A	-

Connection Code		Also sold as
I	Imperial	2
M	Metric	3
P	Pipe (1/4” NPT, 316SS only)	0

PD05	1	- 832	S	I

OUTPUT CODE 6 — 2.0 GPH (7.6 LPH); 50 psi (3.45 bar)

Drive End

Control		
PD06	Manual Control	-
PD76	Enhanced Control with Pulse Input, Remote Stop/Start, and Tank Level Input	

Power Code

X See Power Code Table

Liquid End	Head	Fittings	Balls	Seat / O-Rings	RPM Kit
Molded FastPrime™					
842	PVDF	PVDF	Ceramic	Polyprel®	RPM-842
843	PVDF	PVDF	Ceramic	PTFE	RPM-843
848	PVC	PVC	Ceramic	Polyprel®	RPM-842
Machined FastPrime™					
945	PP	PP	Ceramic	PTFE	RPM-843
947	316SS	316SS	316SS	316SS / PTFE	RPM-947
948	PVC	PVC	Ceramic	Polyprel®	RPM-842
949	Acrylic	PVDF	PTFE	Polyprel®	RPM-949
940	Acrylic	PVC	Ceramic	Polyprel®	RPM-842
AutoPrime™					
A48	PVC	PVC	Ceramic	PTFE / Polyprel®	RPM-A40A
A40	Acrylic	PVC	Ceramic	PTFE / Polyprel®	RPM-A40A
High Viscosity					
644VI	PP	PP	316SS	PTFE	RPM-644
646VI	Acrylic	PP	316SS	PTFE	RPM-646

FastPrime Valve Code		AutoPrime Valve Code	
S	with 4 Function Valve	H	with 4 Function Valve
N	-	A	-

Connection Code		Also sold as
I	Imperial	2
M	Metric	3
P	Pipe (1/4” NPT, 316SS only)	0

PD06	1	- 842	S	I

 ©2018 Milton Roy, LLC

Dimensions

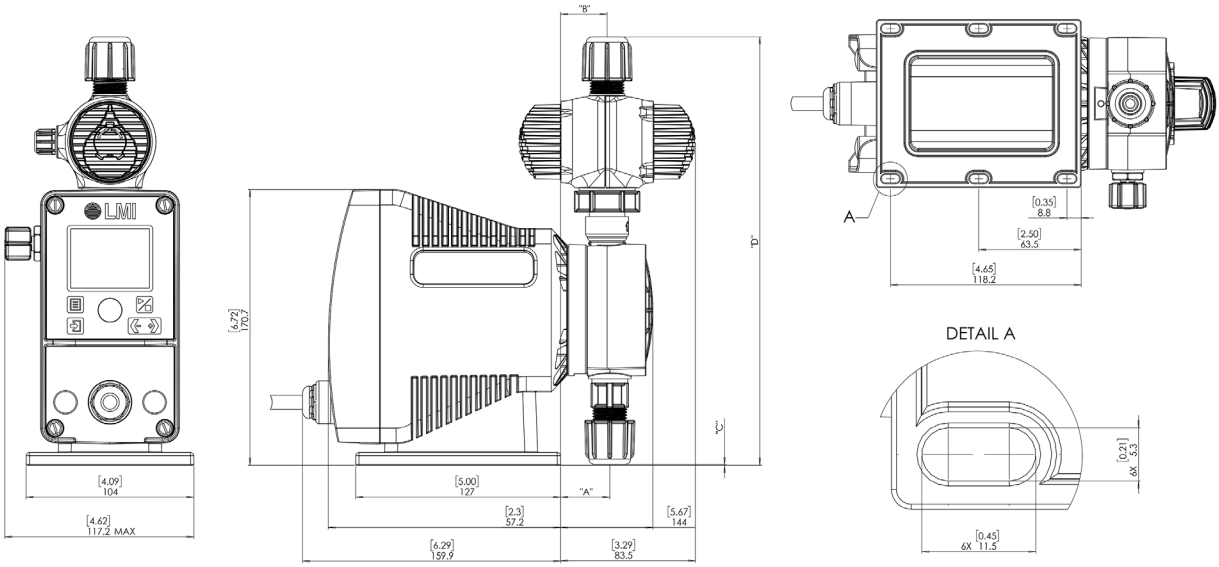

LIQUID END MODEL	"A"		"B"		"C"		"D"	
	INCH	MM	INCH	MM	INCH	MM	INCH	MM
LE-7XXNX	1.20	30.5	1.13	28.8	0.34	8.6	7.84	199.2
LE-7XXNX	1.20	30.5	1.13	28.8	0.34	8.6	10.45	265.4
LE-8XXNX	1.20	30.5	1.13	28.8	0.01	0.3	8.17	207.5
LE-8XXSX	1.20	30.5	1.13	28.8	0.01	0.3	10.45	265.4
LE-90XNX, LE-92XNX, LE-93XNX	1.39	35.2	1.39	35.2	0.10	2.5	7.47	189.7
LE-90XSX, LE-92XSX, LE-93XSX	1.39	35.2	1.39	35.2	0.10	2.5	9.75	247.6
LE-94XNX	1.39	35.2	1.39	35.2	-0.07	-1.8	7.64	194
LE-94XSX	1.39	35.2	1.39	35.2	-0.07	-1.8	9.92	251.9

AUTOPRIME™ LIQUID END

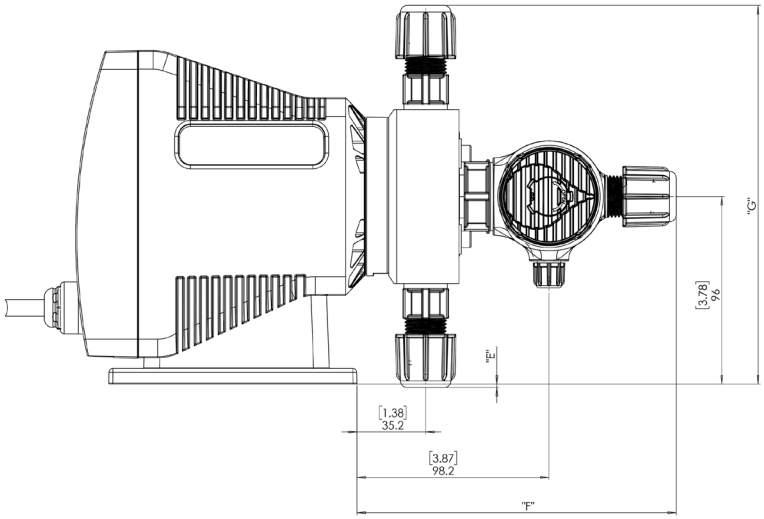

LIQUID END MODEL	"E"		"F"		"G"	
	INCH	MM	INCH	MM	INCH	MM
LE-A1XNX, LE-A2XNX, LE-A3XNX	-0.10	-2.5	4.15	105.4	7.46	189.6
LE-A1XSX, LE-A2XSX, LE-A3XSX	-0.10	-2.5	6.43	163.3	7.46	189.6
LE-A4XNX	0.07	1.8	4.15	105.4	7.63	193.8
LE-A4XSX	0.07	1.8	6.43	163.3	7.63	193.8

Performance Specifications

AutoPrime™ Degassing Liquid Ends

	PSI	GPH	BAR	LPH
PDx4	250	0.20	17.0	0.76
	150	0.30	10.2	1.14
PDx5	110	0.75	7.5	2.84
	50	0.85	3.4	3.22
PDx6	50	1.75	3.4	6.62
	30	1.85	2.0	7.00

About Ingersoll Rand Inc.

Ingersoll Rand Inc. (NYSE:IR), driven by an entrepreneurial spirit and ownership mindset, is dedicated to helping make life better for our employees, customers and communities. Customers lean on us for our technology-driven excellence in mission-critical flow creation and industrial solutions across 40+ respected brands where our products and services excel in the most complex and harsh conditions. Our employees develop customers for life through their daily commitment to expertise, productivity and efficiency. For more information, visit www.IRCO.com

Ingersoll Rand

FastPrime is a trademark of Milton Roy, LLC
AutoPrime is a trademark of Milton Roy, LLC
StayPrime is a trademark of Milton Roy, LLC
Polyprel is a registered trademark of Milton Roy, LLC

JALBRO
Ventas y atención al cliente
Tel. / WhatsApp: 33 1749 3159
ventas@jalbro.com www.jalbro.com

LMI®

Literature #IR-950015-02 rev 3, 11-2021 ©2018 Milton Roy, LLC